Discovery 1100 Series

A Z Supply

800/997-4177

www.beefeatergrillparts.com
www.azgrills.com
www.bbqdoorsanddrawers.com
www.bbqgrillsupply.com

1100s, 1100e, 1100

Assembly and Operating Instructions

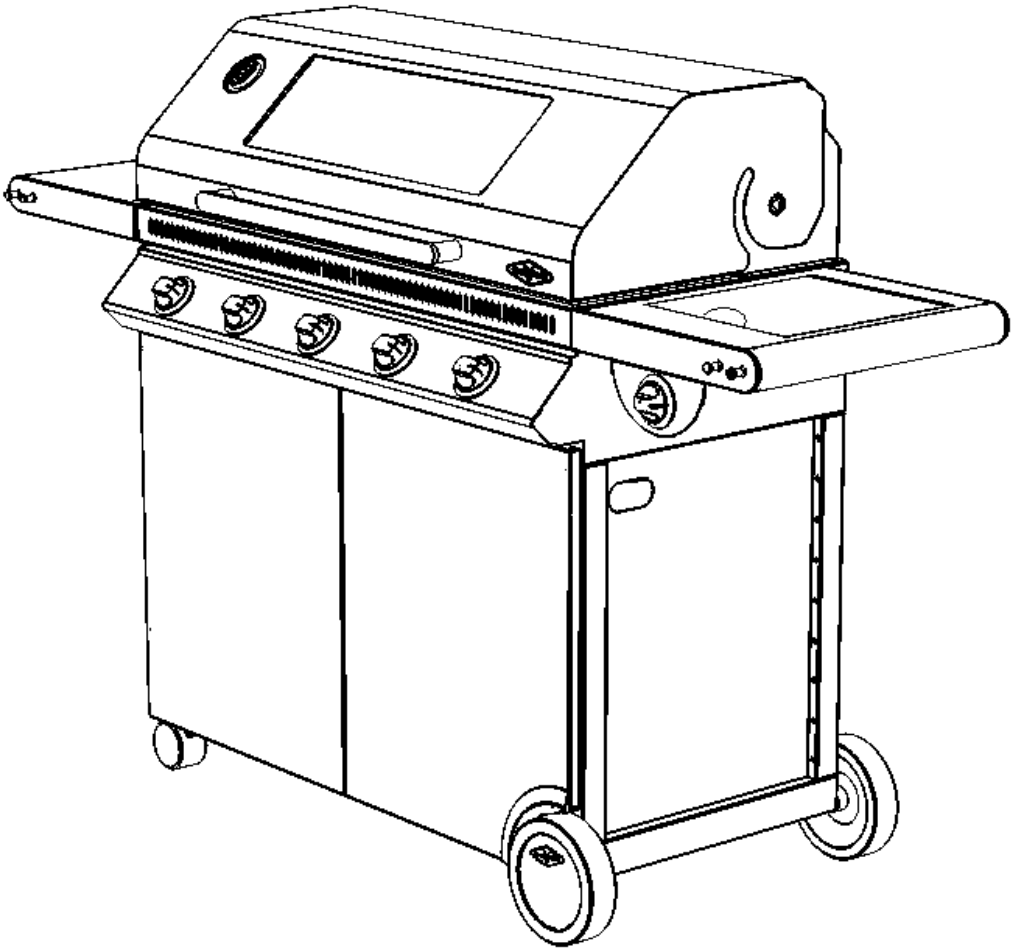

FOR OUTDOOR USE ONLY

Beef Eater

Serious Barbecues

IMPORTANT:

- BeefEater Barbecues are approved for **OUTDOOR USE ONLY** and must not be used in a building, garage or any other enclosed area.
- BeefEater Barbecues must not be used inside recreational vehicles or boats.
- Read instructions thoroughly before operating this Barbecue.
- Save this manual for future reference.
- Always use the Barbecue on a flat, level surface.
- Some foods produce flammable fats and juices. Regular cleaning is essential.
- Attend an operating barbecue at all times. Damage caused by fat & grease fires is not covered by warranty.
- When not in use keep Barbecue dry and covered.

FOR YOUR SAFETY

If you smell gas:

1. Shut off gas to the appliance.
2. Extinguish any open flame.
3. Open hood.
1. If odour continues, immediately call your gas supplier or your fire department.

FOR YOUR SAFETY

1. Do not store or use gasoline or other flammable vapours or liquids in the vicinity of this or any other appliance.
2. An LPG cylinder not connected for use shall not be stored in the vicinity of this or any other appliance.

Safety Warning

Failure to follow these instructions and observe the warnings provided in this operations manual could result in fire, explosion or burn hazard, which could cause property damage, personal injury or death.

Gas vapour is highly explosive and can cause serious bodily injury or damage to property if allowed to accumulate in a confined space and ignited.
This appliance must not be installed under or on any combustible material. Minimum clearance from combustible materials to all sides of the appliance is 450mm (18”).
These instructions must be left with the owner.

NOTE

1. Do not use gas other than the type specified on the Data Plate
2. The appliance is designed for use by adults, keep children away from the 1100Series BBQ at all times.
3. Use only on a flat, level, stable non-combustible surface. Do not use this appliance on any surface that can burn or melt.
4. When in use, gas cylinder should be kept at designated mountings on 1100Series BBQ, and supply hoses kept away from any hot surfaces.
5. To prevent accidental fires, before using the appliance ensure that there is no apparent damage to hose and regulator and all joint connections are in good order and not leaking.
6. Before every use of the appliance, use a soapy water solution on all joints in order to check for leaks. If bubbles appear, it indicates that there is a leak and the appliance must not be used.
7. LPG cylinder, regulator and hose must comply with national standards.
8. Do not move or attempt to move the appliance while in operation.
9. Do not operate this appliance before leak checking hoses and gas cylinder connection.

To the installer:

- For fixed installations, refer also to the requirements of AS5601/AG601, local authority, gas, electricity, and any other relevant statutory regulations.
- For fix installations, refer to AS 5601/AG 601 for pipe sizing details.
- Consult other trades. Where required, consult a bricklayer or an electrician for parts of the installation that could have an effect on these areas.
- Allow a 20mm gap from back of barbecue body for ventilation and air access.
- Test appliance for correct operation before leaving, and instruct user on its use.
- If correct operation cannot be achieved, disconnect barbecue from gas supply, and contact your nearest BeefEater dealer.
- Please only use BeefEater supplied hose(s) to connect this appliance. Natural Gas conversion kits are available from your nearest BeefEater dealer.

Leave these instructions with customer

DO NOT	DO
• Lean over barbecue when lighting. • Leave cooking food unattended. • Delay lighting burners after turning gas on. • Spray or store aerosols in vicinity of barbecue whilst in operation. • Store combustible materials, gasoline or flammable liquids or vapours within 450mm (18”) of barbecue. • Use caustic based cleaning agents on the barbecue. • Operate barbecue with any cover on. • Use plastic or glass utensils on the barbecue. • Operate barbecue in strong winds. • Attempt to dismantle control valves. • Attempt to dismantle or adjust regulator. • Test for gas leaks with a naked flame. • Store gas cylinder indoors, or in any enclosed area. • Lay the gas cylinder down. Always keep it upright. • Use barbecue indoors. • Expose hose to direct sunlight. • Modify the construction of this appliance or the size of any burner or valve orifice. • Move the appliance during use. • Obstruct any ventilation of barbecue or the cylinder. • Allow the flexible gas supply hose or any electrical cord to come in contact with hot surface of the appliance. • Allow children to operate this appliance. • Use charcoal or any other solid fuel in this appliance. • Disconnect any gas fittings while the appliance is operating. • Use a rusty or dented gas cylinder or cylinder with a damaged gas valve. • Fill the gas cylinder beyond 80% capacity. • Touch some accessible parts, other than the ones meant for handling. They may be hot.	• Spanner tighten all gas fittings as per instructions. • Check all gas hoses and line connections for damage, cuts or cracks each time the appliance is about to be used. • Always leak test with a solution of soapy water. • Check main opening, throat and venturi to each burner and pilot flame tube regularly for insect nests (eg. wasp, ants or spiders). Nests are dangerous and must be cleaned out thoroughly. • Visually check burner flames to confirm lighting. • Use your barbecue only on a level surface. • Attend barbecue whilst cooking food. • Preheat the barbecue for up to 10 minutes. • After cooking turn barbecue to high for up to 10 minutes to burn off excess grease. • Let the barbecue cool before replacing any lid or cover. • Regularly replace foil material in grease/drip tray. • Keep children away from barbecue at all times. • Have the gas cylinder filled by an authorised LPG supplier. • Refer to this instruction manual if in doubt concerning assembly, installation, or operation. • Use protective gloves when handling hot components. • Close the gas cylinder valve after each use. • Clean the grease/drip tray regularly and clean the appliance at least twice annually. • Always remove any lid or cover off the appliance before lighting. • Carefully follow the instructions relating to the hose/regulator connection. • Keep the barbecue area free from combustible materials, gasoline, flammable liquids or vapours.

- Should the appliance go out for any reason, turn off all control knobs and the cylinder gas valve. Wait 5 minutes before attempting to relight the appliance.
- If a grease or fat fire should occur, immediately turn off all control knobs and the gas cylinder valve until the fire is out. Remove all food from the appliance.
- A leak test must be carried out prior to using the appliance for the first time and whenever the gas cylinder is refilled or whenever the gas hose and regulator have been disconnected from the gas cylinder or appliance.

Gas Cylinder Safety Information

- Gas cylinders **must be stored outdoors**, out of reach of children and must not be stored in a building, garage or any other enclosed area.
- This appliance is designed to be used with a gas cylinder not exceeding 9KG (20lbs) capacity.
- The Gas cylinder must be constructed and marked in accordance with specifications for LP Gas Cylinders.
- The gas cylinder supply valve must be turned off when the appliance is not in use.
- The gas cylinder used must incorporate a safety collar to protect the valve assembly.
- The gas cylinder must always be kept and used in the upright position.

Important:

When disconnecting and removing the gas cylinder for the purpose of refilling, always observe the following procedure:

- Ensure that all gas control valves on the appliance and the gas cylinder are turned off before disconnecting the gas line from the cylinder.
- Do not smoke or use a naked flame near the appliance or gas cylinder while disconnecting the gas line between the appliance and gas cylinder.
- Remove the gas cylinder from the enclosure before disconnecting the gas line from the appliance.
- Tighten all connections before placing the gas cylinder back in its enclosure.

The Gas Leak Testing Procedure should be conducted every time the gas cylinder is refilled and reconnected to the appliance – before using the appliance.

Regulator Connection

1. Check that all control knobs are in the 'Off' position.
2. Make sure the cylinder valve is off by turning the valve knob all the way clockwise.
3. Remove the protective cap from the cylinder if present.
4. Make connection as described in figures 1 and 2.
5. Leak-test the connection with a soapy water solution. (See Gas Leak Testing Procedure).

Hose and regulator replacement must be a genuine part specified for this appliance, and can be obtained at your nearest BeefEater stockist.

Fig 1

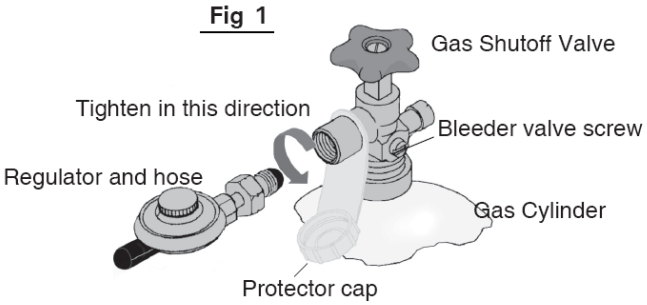

Standard POL Regulator

Fig 2

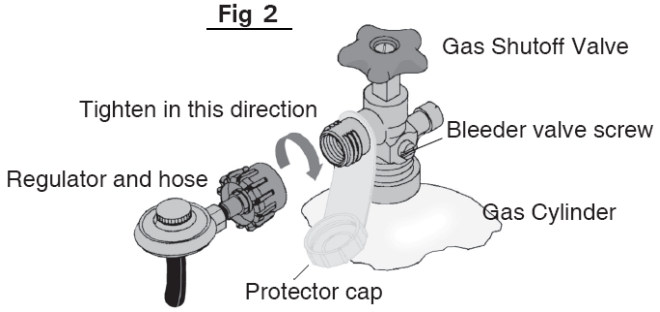

Quick Connect Regulator

Gas Leak Test Procedure

Use the following procedure to check for gas leaks.
Never use a naked flame to check for gas leaks.

1. In a small container, mix up a solution of water and detergent or soap. Mix the solution well.
2. Make sure that the gas supply valve on the gas cylinder is turned on.
3. Make sure that the gas control valves on the appliance are all turned off.
4. Using a brush or spray bottle apply the solution to the gas line and each join in the gas line. See Fig 3.
5. Bubbling of the solution will indicate that there is a leak present.
6. Re-tighten or re-seal any joints that are leaking.
7. If a leak persists then contact your distributor or the manufacturer for assistance.

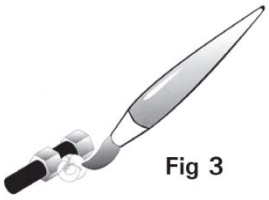

Fig 3

Serious Barbecues

Know your BBQ:

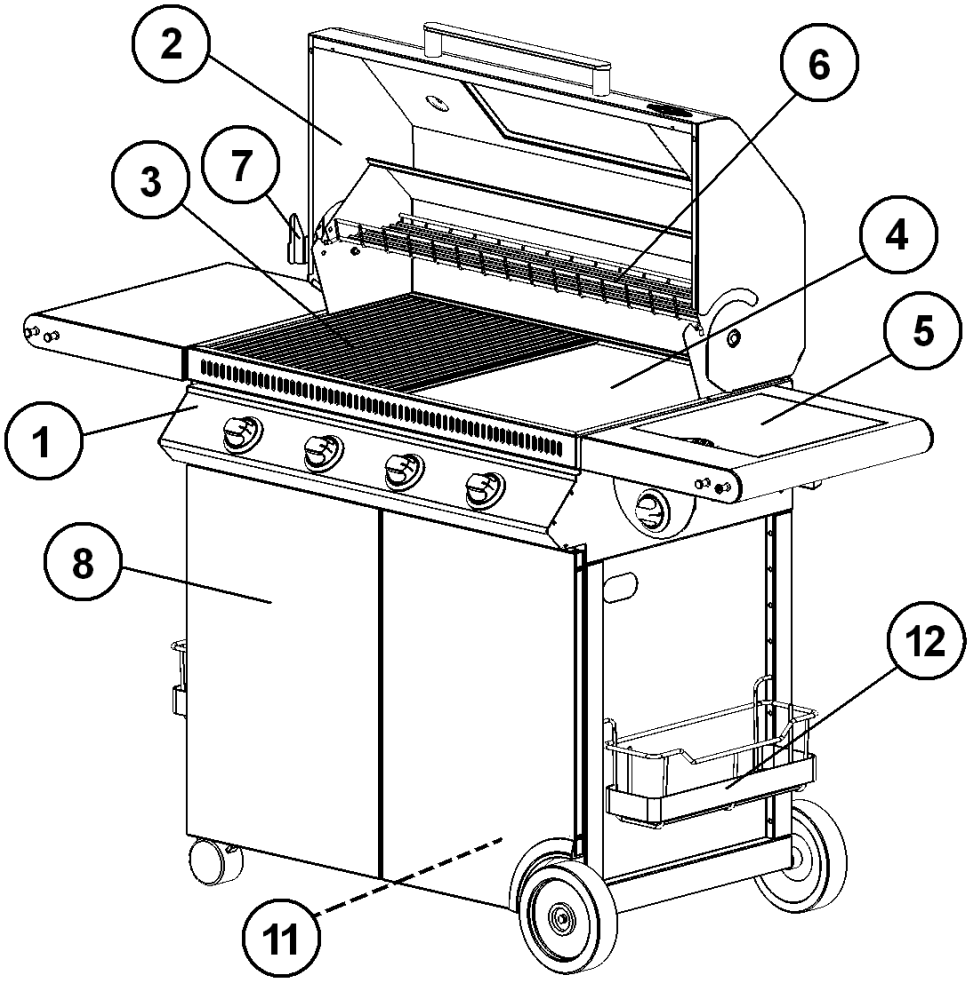

1. **BBQ Body**
2. **Hood**
3. **Cooking Grill**
4. **Cooking Plate**
5. **Side Burner**
6. **Warming Rack**
7. **Rotisserie Bracket***
8. **Cabinet Trolley****
9. **Vaporizers**
10. **Burner**
11. **Gas Cylinder Compartment (inside)**
12. **External Baskets*****

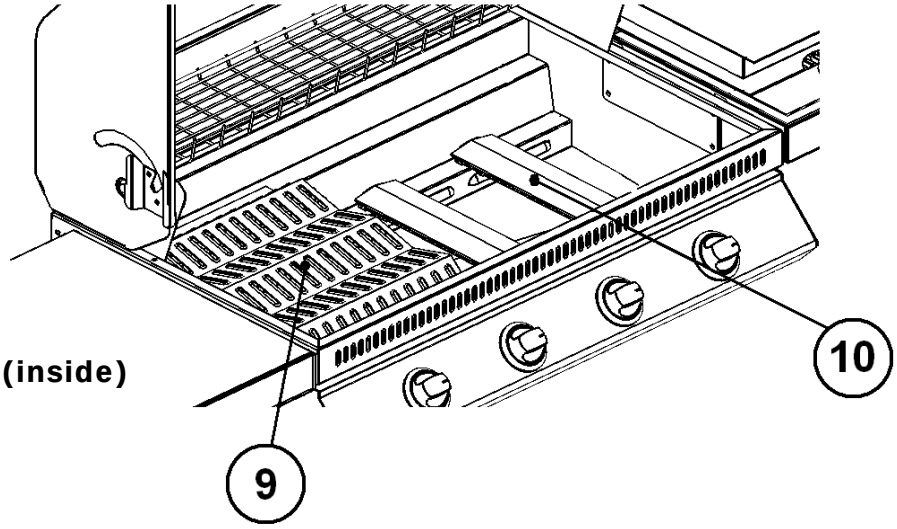

* Rotisserie is sold separately
** Trolley is packed in a separate carton
*** May not be included with all models

Images in this manual are for illustrative purposes only. Due to constant improvement, BeefEater advises that changes to the design, material, specifications and product configuration may occur at any time without notice.

Woodland Home Products
3-5 Birmingham Av, Chester Hill,
NSW, Australia, 2162
Phone: 1800 356 660
Facsimile: 02 9724 8899
E-mail: mail@beefeaterbbq.com
Website: www.beefeaterbbq.com

Assembly Instructions

General

This barbecue can be mounted onto a mobile trolley.
The Trolley is packed in a separate carton. Please refer to the Trolley instruction booklet for assembly of the trolley, and barbecue mounting.

Once the barbecue had been properly installed, please check the following:

1. Hood is fully engaged into the four slots in the barbecue's body.

2. All burners are in place correctly and secure by an 'R' clip:

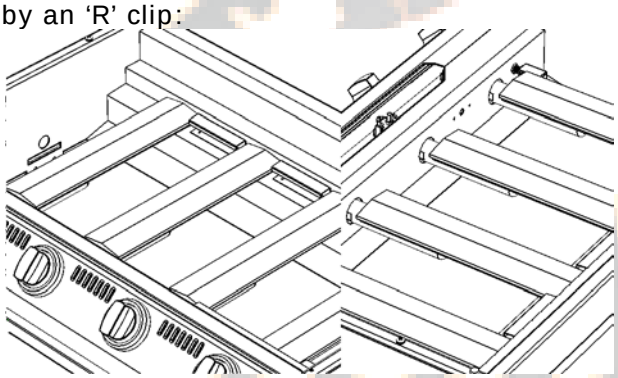

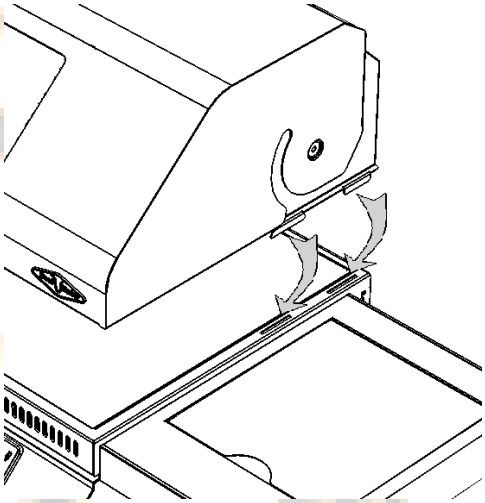

3. Vaporizers are installed individually on the steps above burners, but under the Grill (not required under the Plate). They are inserted into the positioning slots like this:

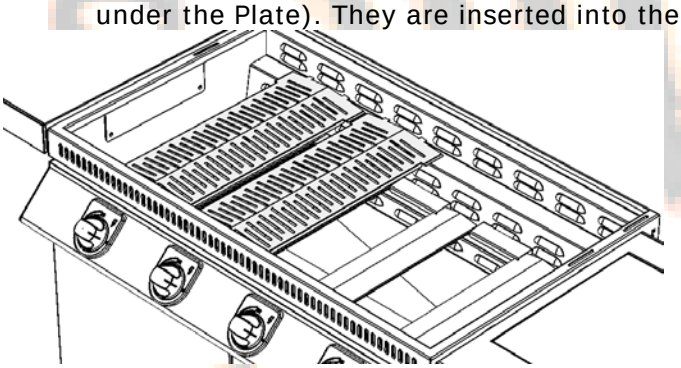

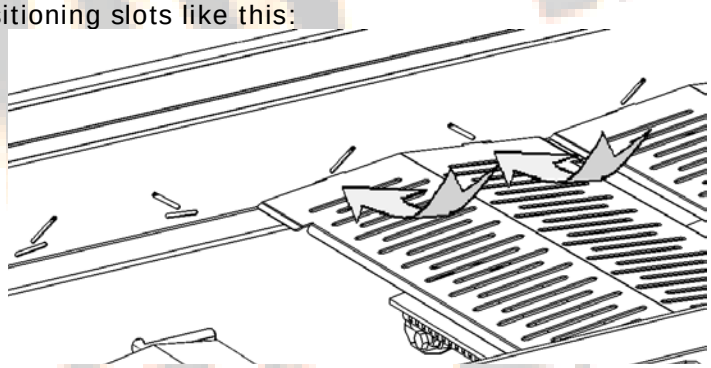

4. Cooking surfaces (Grill and Plate) are clean, and installed over the burners and vaporizers.

Using Your Barbecue:

Before you light the Barbecue

Perform the following checks:

- Make sure all connections are tight, and leak-tested. Gas regulators fitted with a hand-tightened wheel must be checked to ensure they are secured.
- Check that all control knobs are in the 'Off' position, and that gas supply is turned off.
- Ensure that the Hood on the barbecue, and the Lid on the side-burner are open. If lids are closed there is a risk of gas accumulating inside, and creating a dangerous situation.
- The hose and regulator supplied with this barbecue must be used at all times whilst operating this barbecue. Inspect the hose and regulator regularly for cracks or any sign of damage. If there is excessive abrasion or wear, replace only with a genuine BeefEater regulator.
- The bottom panel of the Barbecue is clean and free of any fat or other food residue.

Grease Collecting Pan

The grease Collecting Pan is located on 2 brackets below the BBQ's bottom panel, on the left-hand-side. Make sure the pan is always in its place when operating the barbecue, to avoid fat dripping directly into the trolley. Make sure the grease pan is emptied and cleaned regularly.

Also ensure the grease is cleaned off the bottom of the Barbecue before each use.

Lighting the Barbecue

- Ensure the appliance is placed on a flat, level, non-combustible surface.
- Ensure the regulator is connected to the LPG cylinder (See Regulator Connection page 4.), and the hose is not subject to any twisting, and is not close to hot surfaces.
- Verify all joints are spanner tight and check for leaks after turning on gas supply. See correct procedure on page 4.
- Ensure all knobs are in the 'Off' position.
- Ensure vaporizers, cooking plate and grill are in place.
- Open Gas Cylinder valve.

Note:
The barbecue is fitted with a safety feature that prevents the burners from being accidentally turned on. You **must push the knob inwards** to disengage the lock, and only then start turning it.

Light each burner by following this procedure:

- Read all instructions before lighting.
- Open Hood before lighting.
- Push in and turn Right-Hand-Side knob counter-clockwise to 'High'.
- If ignition does not occur, return to 'Off' and repeat after 5 minutes.

Check for a clear blue flame with just a tip of yellow.
Once the right-hand-side burner is alight, light each successive burner from right to left.

⚠ Excess yellow tipping means the combustion is not right, if that is observed, turn the Barbecue burners off, and refer to troubleshooting at the end of this manual.

⚠ Do not use more than 2 burners on 'High' with the hood closed.

If the burner does not light

Keep the control knob pushed, and return the knob in the clockwise direction to the 'Off' position. Wait 5 minutes, and repeat the lighting procedure steps 1 – 4 above again.
If after a few attempts you still can not light the burners, contact your retailer before proceeding.

Manual Lighting

Press and turn the right hand control knob anti-clockwise to the 'High' position, then, using a long match, light the right hand burner immediately through the cooking grill and vaporizer.

Check for proper burner operation

Following operating instructions light each burner and check for a clear blue flame with just a tip of yellow. Excess yellow tipping can be adjusted using the screw on the side of the burner. If you are unable to achieve correct operation, consult your dealer.

Preparing the Plate and Grill:

Your barbecue has heavy duty enamelled Cast Iron plate and grill. Enamel is a hard, non-rusting surface which will ensure the long life of your cooking surface.
The plate and grill are ready to use, but it is recommended to wash them with warm soapy water and a soft cloth, and rinse before use.
To ensure the longevity of the enamel surface on the Cast Iron plate and grill it is strongly advised to avoid impact with other metal parts and sharp utensils.

To turn off a burner

Simply turn the knob (without pushing) clockwise to the 'Off' position.

After Use

It is a good idea to leave the barbecue on for about 10 minutes after you have finished cooking. This helps to burn away any excess food residues and oil, and makes cleaning easier.

1. Be sure to turn off all control knobs and the gas supply.
2. Allow the barbecue to cool.
3. Clean the drip tray and cooking surfaces. Clean any food spills from the side burner, if one is installed.
4. Lower the hood and side burner lid.

The gas cylinder supply valve must be turned off when the appliance is not in use.

Direct Cooking Method

Commonly used for traditional barbecuing. Place food over the lit grill section. Some flaring may occur, so care must be taken while cooking. Check inside the roasting hood regularly. The direct cooking method is recommended for steaks, chops, sausages, and hamburgers.

Indirect Cooking

Indirect cooking involves little or no heat directly underneath the food. Instead, the food is placed on the grill, the burners below the food are turned off or Low, and burners on either side are used. The hood is closed to trap heat and moisture. With this method, heat circulates around the food, cooking by convection. By trapping the vapour inside your “outdoor oven”, the cooking vapour will fall back on the food on all sides, not just from underneath. The food cooks more evenly, and stays moist in the process. Indirect cooking is similar to using a conventional oven and is recommended for rotisserie cooking, roasts, poultry, casseroles, vegetables and whole fish.
When cooking a roast, it is a good idea to use a roast holder and baking dish. Always use a baking dish with a depth greater than 35mm. Shallower trays may fill quickly and overflow, which may cause a fat fire.

Controlling the Burners

The control knob can now be turned to the desired heat setting, Low, High or anywhere in between. The control knob does not need to be pushed in while selecting the heat setting.

Storing Your Barbecue

When storing barbecue for extended periods, be certain all controls and cylinder valves are turned off. If storing the barbecue indoors remove gas cylinder and store the cylinder in a ventilated area outdoors. Gas cylinders must be stored outdoors, out of reach of children and must not be stored in a building, garage or any other enclosed area.
The barbecue should be covered when not in use. Eg with a polyester or vinyl barbecue cover.

Technical Information

Note: Do not modify this appliance. Any deviation from factory settings could result in a safety hazard.

Barbecue manifold inlet thread: 3/8 SAE male flare fitting.

Gas Pressure:
LPG – 2.75 Kpa;
NG – 1.0 Kpa
Gas Nozzle size:
LPG – Ø1.15mm;
NG – Ø1.90mm;

Gas Input: 17Mj/Bnr

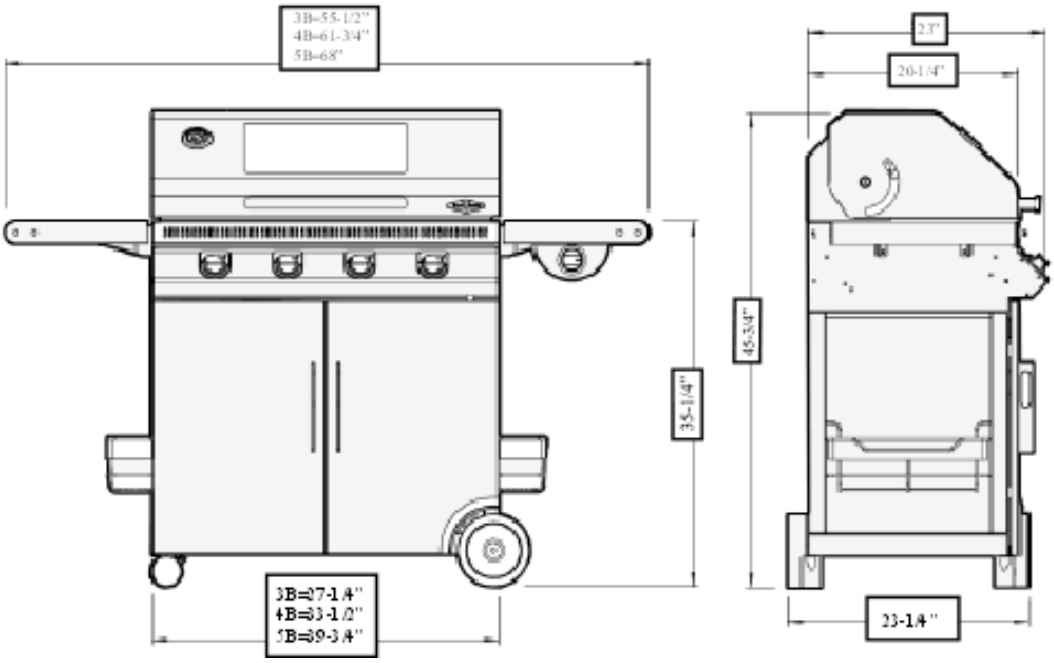

Locating Your Barbecue:

Most importantly, this is an outdoor appliance. Ensure your barbecue is positioned safely away from anything that can catch fire.

Outdoor Use Only: Under no circumstances is this barbecue to be used indoors. This includes garages or any other enclosed area.

Clearance from Combustibles: Ensure your barbecue remains at a distance of at least 45 cm (18”) from any combustible material such as wood, gyprock, paper and plants. Do not store combustible materials, gasoline or flammable liquids or vapours within 45 cm (18”) of the barbecue.

Adequate Ventilation: Ensure there is adequate ventilation for both the barbecue and cylinder. This is required not only for proper combustion, but also to prevent gas build up.

20mm ventilation and air-intake gap is to be left at rear of the barbecue in fixed installations.

Firm Level Surface: Use your barbecue only on a firm level surface. This barbecue is not designed for recreational vehicles, and shall not be installed on a boat or any marine craft.

Protection From Weather: Keep the barbecue protected from adverse weather, including rain and high winds.

Polyvinyl covers are available that have been specially designed for this range of barbecues.

Allow clear access to the entire gas supply hose and regulator.

Maintenance Access: When your barbecue is installed, you should be able to access the gas supply line including the gas piping or hose, gas regulator, gas cylinder and any shut off valves.

Partial Enclosures: Many backyards have areas that are partially closed off, such as balconies and pergolas. In some cases, it is hard to decide whether these partially enclosed areas should be classified as indoor areas. This manual provides clear definition of such areas in page 10 for your reference.

Connect the Regulator to the gas Cylinder

⚠ Verify ‘Gas Type’ label & data plate attached to side of barbecue is correct for the gas you are about to connect to.

The hose and regulator is connected to the BBQ and leak tested at factory. Do not disassemble unnecessarily.

1. Make sure burner valves are in the ‘Off’ position.
2. Screw regulator side to the cylinder, and hand-tighten. See more details on page 4.

⚠ **Note**:

- If moving the BBQ from one place to another, never drag the cylinder behind. Disconnect the cylinder first, move, and re-connect once reached the new location.
- For storage and cylinder exchange, disconnect hose at the cylinder only, do not disconnect hose from the appliance.
- If you have purchased a trolley with a Side-Burner, please refer to Trolley instruction book for correct connection of the Side-Burner to the gas supply.

Maintenance

1. Use only soft cloth or sponge to clean the surfaces of barbecue and then carefully dry.
2. Avoid leaving acidic or alkaline substances on the plate. It may cause discolouration and corrosion.
3. Keep the igniters probe clean. Wipe away any apparent water or dirt.
4. Clean the unit after each use to maintain the appearance and prolong the appliance’s life. Do not use corrosive materials or harsh detergents to clean the BBQ.

Service and Maintenance Schedules	Each Use	6 Monthly	2 Yearly
Check gas supply hose(s) for cracks and leaks	✓		
Check gas regulator for leaks	✓		
Check that all gas fittings are tight	✓		
Inspect and clean ignition module and probe		✓	
Inspect and clean barbecue Burners		✓	
Inspect and clean gas injectors			✓
Check gas control valve on cylinder			✓
Inspect gas control valves			✓
Inspect and proof all internal structure barbecue and trolley			✓

Installation Options

Partial Enclosures

This appliance shall only be operated in an above ground, open air situation with natural ventilation, without stagnant areas, where gas leakage and products of combustion are rapidly dispersed by wind and natural convection. Any enclosure in which the appliance is used shall comply with one of the following:

Within a partial enclosure that includes an overhead cover and no more than two walls.	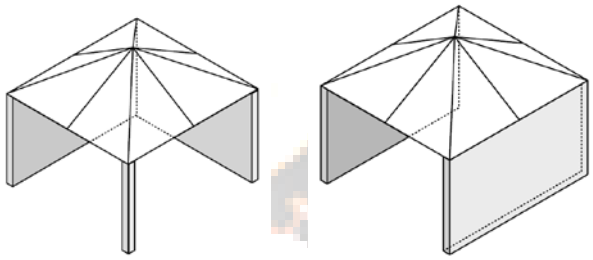
Any enclosure with walls on all sides, but at least one permanent opening at ground level, and no overhead cover.	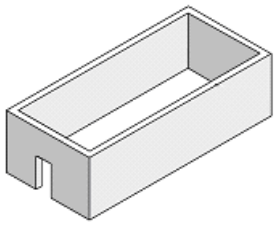
Within a partial enclosure that includes an overhead cover and more than two walls, the following shall apply: ▪ At least 25% of the total wall area is completely open; and ▪ At least 30% of the remaining wall area is open and unrestricted. In the case of balconies, at least 20% of the total of the side, back and front wall areas shall be and remain open and unrestricted.	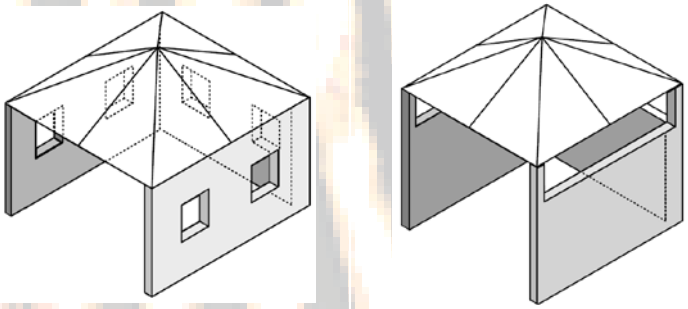

Before proceeding, you need to establish the gas type which your barbecue will run on, and the style of installation you need.

Natural Gas or LPG/Propane.

Before beginning installation or assembly, check that the gas type which the barbecue is designed for is correct for the gas available to you. In most countries the choices are natural gas or LPG/propane. You will find the gas type label on the side of your barbecue. If your barbecue uses the incorrect gas type, or if you are unsure, consult your dealer before going any further. Using the wrong type of gas for a barbecue is extremely dangerous.

Natural Gas Conversion: Most newly purchased barbecues are made for LPG/propane. A natural gas conversion kit is available to allow your barbecue to run on Natural Gas. This kit includes all hoses required for installation.

Service Assistance:

To assist you when contacting your after-sales service agent and to arrange for service, please have the barbecue details ready when you call. You do not need to register your warranty. However, you must retain your receipt or proof of purchase. When claiming warranty for this appliance you must provide a copy of your proof of purchase receipt. No claims for warranty will be accepted without proof of purchase. For all parts and service, contact your nearest BeefEater dealer.

Warranty:

Should any part fail due to defective workmanship or faulty materials within the specified period from the date of purchase, BeefEater or its distributor will repair or, (at distributors option), replace the defective part free of charge.

LP / Propane Gas Cylinder
The cylinder manufacturer is responsible for the materials, workmanship and performance of the gas cylinder. Contact your dealer or the cylinder manufacturer in respect of all warranty claims or service.

Warranty Administration
In Australia, warranty is administered by BeefEater Barbecues.
To ensure speedy processing of your warranty service claim, ensure that you record all specific details about your appliance in the space provided. Keep this information handy for future reference, and a copy of your purchase receipt.

NOT COVERED

Storage
Exposure of the barbecue appliance to the elements should be minimised. Once the unit has cooled and is cleaned, store the barbecue under cover. Metal covers are an optional accessory that will ensure years of trouble free operation.
This warranty does not cover the purchaser or any other person for damage, malfunction or loss due to the following:

- Lack of maintenance, abuse, neglect, misuse, accident or improper installation of this appliance.
- Scratches, dents, corrosion or discolouring caused by heat, abrasive or chemical cleaners or chipping of porcelain or painted parts.
- Corrosion or damage caused by exposure to the elements, grease fires, insects, weather or hail.
- Cleaning and normal wear and tear. Service calls of this nature are chargeable.
- Rusting of steel plates and burners.
- Commercial use of the barbecue.
- Unauthorised repairs during the warranty period
- Removal or re-installation costs.
- Cracks and weathering of plastic parts caused by exposure to the elements or damage by weather, heat, insects, chemicals or foods acids or juices.

Note: Barbecues must be covered when not in use.
Note: Rust should be removed by a scrub pad and the surface coated with cooking oil. Cooking surfaces must be covered when not in use.

Conditions of Warranty

1. The appliance is delivered to the BeefEater distributor's service department or authorised service agent and freight charges both ways are paid by the owner. No liability is accepted for loss or damage during transit.
2. The appliance is operated and maintained in accordance with the instructions supplied.
3. Repairs or service must be carried out by an authorised person. Installation must conform to the applicable Gas, Electrical and Building standards laid down by the local codes for your state or region.
4. No alterations or repairs have been carried out without obtaining the distributors prior consent. Such repair or any replacement does not extend the warranty period.
5. Proof of purchase together with this warranty card must be provided to verify purchase date and establish the warranty period. Only the original purchaser is covered under this warranty.
6. The warranty period is calculated from the date of purchase only.
7. Where this warranty is inconsistent with any state laws, the statutory rights of the purchaser shall prevail.
8. Parts installed from other manufacturers' products will void this warranty.

Warranty Term

All parts are covered for a period of 1 year from date of purchase.

Troubleshooting

Condition	Possible Cause	Solution
Flame goes out while in use	Empty Gas cylinder.	Replace cylinder.
	Air mixed in hoses.	Re-ignite and allow operating for a short while, till clears out
	Blockage	Seek professional assistance.
Ignition failure	gas cylinder valve close	Turn off knob button, then open the cylinder valve
	Air mixed in the hoses	Re-ignite and allow operating for a short while, till clears out.
	Rubber hose wrapped, deformed or pinched	Release hose, ensure not damaged or leaking
	Spark Escaping	Ensure the spark probe is in place, not deformed, clean.
	No Spark	Seek professional assistance.
Foul smell of gas	Damage to hose	Turn cylinder valve off, replace hose.
	Leakage	Leak-test, and tighten where required. If leakage can't be rectified, cease using appliance, and seek professional assistance
	Burner went off	Shut off valves, wait for 5 minutes and reignite
	Incorrect combustion	Seek professional assistance
Flame appear to separate off the burner or flame burns with noise	blockage of burner Ports	Clean the burner thoroughly. If problem persists, Seek professional assistance
Yellow Tipping in Flame	Air/Gas mixture screw in burner incorrect	Try to open screw to remove yellow. If not changing, seek professional assistance

Spare Parts:

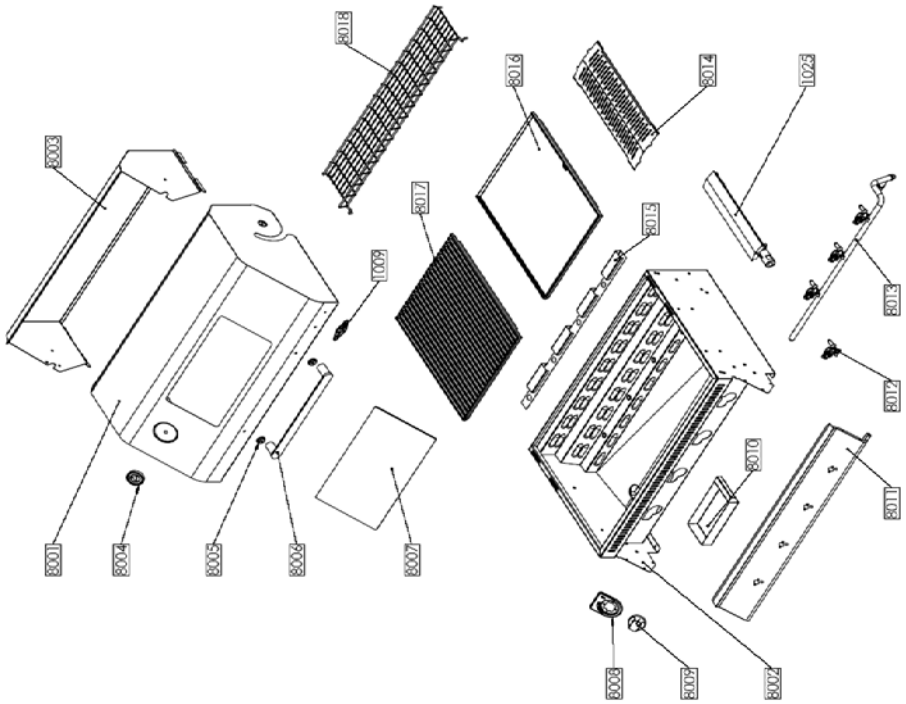

Index	Part No	Description
1009	060509	Beefeater Badge
1025	94701	Cast iron burner
8001	DIS2713 xB	Hood Front Assembly (1100s & 1100e)
	DIS2860 xB	Hood Front Assembly (1100)
8002	DIS2723 xB	BBQ Frame
8003	DIS2712 xB	Rear Hood
8004	060605	Temp Gauge
8005	DIS2793	Handle spacer (phenolic)
8006	DSI2089 xB	Handle (Al, shot blast) 1100s, 1100e
		Tube Handle (Dis 1100 hood only)
8007	DIS2719 xB	Window glass (1100s &1100e)
8008	DIS2809	Bezel 1100s
	060545	Bezel 1100e, 1100
8009	060543	Knobs shot blast 1100s
	060543	Knobs phenolic 1100e, 1100
8010	DIS2734	Fat collecting pan SS
8011	DIS2733	Fascia
8012	040218	Valve
8013	DIS2850 xB	Manifold/Valve Assembly
8014	DIS2811	Vaporizer
8015	DIS2790 xB	Crossfire (For 1100e and 1100 only)
8016	94135	Cast iron plate-400mm (16 inches)
	94013	Cast iron plate-320mm (13 inches)
8017	94125	Cast iron grill-400mm (16 inches)
	94113	Cast iron grill-320mm (13 inches)
8018	DIS2800 xB*	Warming rack
--	040176	Injector LPG Ø1.15mm
--	060627s	Temp. gauge bezel--shot blast 1100s
	060627e	Temp. gauge bezel--chrome 1100e
8019		Instruction Book
1028	94402 xB	Rain Cover
1029	BBQ_BOOK	Cook Book for Discovery

x - 2, 3, 4 or 5 Burners